SIEMENS

Data sheet 3UG5651-2CW30

Siemens EcoTech

digital monitoring relay speed monitoring from 0.1 to 6000 r/min overshoot and undershoot supply voltage 24 ... 240 V AC/DC, 50 .. 60 Hz ON delay and tripping delay 0.1..999.9 s 2 changeover contacts spring-loaded terminal

product brand name	SIRIUS
product designation	Speed monitoring relay with digital setting
design of the product	monitoring of speed, external power supply with auxiliary voltage
product type designation	3UG5
General technical data	
product function	RPM monitoring relay
design of the display	LCD
insulation voltage	
● **for overvoltage category III according to IEC 60664**	
— with degree of pollution 2 rated value	690 V
— with degree of pollution 3 rated value	690 V
degree of pollution	3
type of voltage of the control supply voltage	AC/DC
protection class IP	
● of the enclosure	IP20
● of the terminal	IP20
shock resistance according to IEC 60068-2-27	sinusoidal half-wave 15g / 11 ms
vibration resistance according to IEC 60068-2-6	f = 4 ... 5,81 Hz, dmax = 15 mm; f = 5,81 ... 500 Hz, Amax = 20 m/s²; 10 cycles
mechanical service life (operating cycles) typical	10 000 000
electrical endurance (operating cycles) at AC-15 at 230 V typical	100 000
thermal current of the switching element with contacts maximum	5 A
Substance Prohibitance (Date)	06/01/2023
SVHC substance name	Lead - 7439-92-1 Lead monoxide (lead oxide) - 1317-36-8 2,2',6,6'-tetrabromo-4,4'-isopropylidenediphenol - 79-94-7
Net Weight	0.175 kg
Product Function	
product function	
● standstill monitoring	No
● rotation speed monitoring	Yes
● adjustable open/closed-circuit current principle	Yes
● manual RESET	Yes
suitability for use safety-related circuits	No
Control circuit/ Control	
control supply voltage at AC	
● at 50 Hz rated value	24 ... 240 V

Subject to change without notice
© Copyright Siemens

● at 60 Hz rated value	24 ... 240 V
control supply voltage at DC rated value	24 ... 240 V
operating range factor control supply voltage rated value at DC	
● initial value	0.85
● full-scale value	1.1
operating range factor control supply voltage rated value at AC at 50 Hz	
● initial value	0.85
● full-scale value	1.1
operating range factor control supply voltage rated value at AC at 60 Hz	
● initial value	0.85
● full-scale value	1.1
Measuring circuit	
measurable line frequency	50 ... 60 Hz
adjustable operating delay time	999.9 s
adjustable response delay time	
● when starting	0 ... 999.9 s
● with lower or upper limit violation	0 ... 999.9 s
accuracy of digital display	+/- 1 Digit
Communication/ Protocol	
protocol is supported IO-Link protocol	No
Auxiliary circuit	
number of CO contacts delayed switching	2
Inputs/ Outputs	
design of input feedback input	No
number of outputs as contact-affected switching element	
● safety-related	
— instantaneous contact	0
ampacity of the output relay at AC-15	
● at 230 V at 50/60 Hz	3 A
● at 250 V at 50/60 Hz	3 A
● at 400 V at 50/60 Hz	3 A
ampacity of the output relay at DC-13	
● at 24 V	1 A
● at 125 V	0.2 A
● at 250 V	0.1 A
operational current at 17 V minimum	5 mA
Galvanic isolation	
galvanic isolation	
● between input and output	Yes
● between the outputs	Yes
● between the voltage supply and other circuits	Yes
Connections/ Terminals	
product component removable terminal for auxiliary and control circuit	Yes
type of electrical connection	spring-loaded terminal (push-in)
● for auxiliary and control circuit	spring-loaded terminals (push-in)
type of connectable conductor cross-sections	
● solid	1x (0.5 ... 4 mm²)
● finely stranded with core end processing	1x (0.5 ... 2.5 mm²)
● finely stranded without core end processing	0.5 ... 4 mm²
● for AWG cables solid	1x (20 ... 12)
● for AWG cables stranded	20 ... 12
connectable conductor cross-section	
● solid	0.5 ... 4 mm²
● finely stranded with core end processing	0.5 ... 2.5 mm²
● finely stranded without core end processing	0.5 ... 1.5 mm²
AWG number as coded connectable conductor cross	

Subject to change without notice
© Copyright Siemens

section	
● solid	24 ... 12
● stranded	20 ... 12
Installation/ mounting/ dimensions	
mounting position	any
fastening method	screw and snap-on mounting
height	100 mm
width	22.5 mm
depth	90 mm
required spacing	
● with side-by-side mounting	
— forwards	0 mm
— backwards	0 mm
— upwards	0 mm
— downwards	0 mm
— at the side	0 mm
● for grounded parts	
— forwards	0 mm
— backwards	0 mm
— upwards	0 mm
— at the side	0 mm
— downwards	0 mm
● for live parts	
— forwards	0 mm
— backwards	0 mm
— upwards	0 mm
— downwards	0 mm
— at the side	0 mm
Ambient conditions	
installation altitude at height above sea level maximum	2 000 m
ambient temperature	
● during operation	-25 ... +60 °C
● during storage	-40 ... +80 °C
● during transport	-40 ... +80 °C

Approvals Certificates

General Product Approval	other
CCC, CE EG-Konf., UL, EAC	Confirmation, 产品合格 QC PASS

Environment

Siemens EcoTech, EPD

Environmental Confirmations

Further information

Information on the packaging
https://support.industry.siemens.com/cs/ww/en/view/109813875
Information for data generation and storage
https://support.industry.siemens.com/cs/ww/en/view/109995012
Information- and Downloadcenter (Catalogs, Brochures,…)
https://www.siemens.com/ic10
Industry Mall (Online ordering system)
https://mall.industry.siemens.com/mall/en/en/Catalog/product?mlfb=3UG5651-2CW30
Cax online generator
https://support.automation.siemens.com/WW/CAXorder/default.aspx?lang=en&mlfb=3UG5651-2CW30
Service&Support (Manuals, Certificates, Characteristics, FAQs,...)

Subject to change without notice
© Copyright Siemens

https://support.industry.siemens.com/cs/ww/en/ps/3UG5651-2CW30

Image database (product images, 2D dimension drawings, 3D models, device circuit diagrams, EPLAN macros, ...)
https://www.automation.siemens.com/bilddb/cax_de.aspx?mlfb=3UG5651-2CW30&lang=en

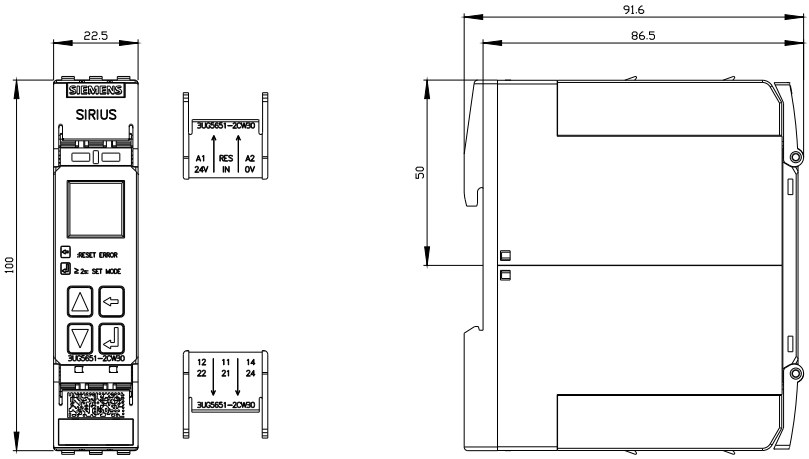

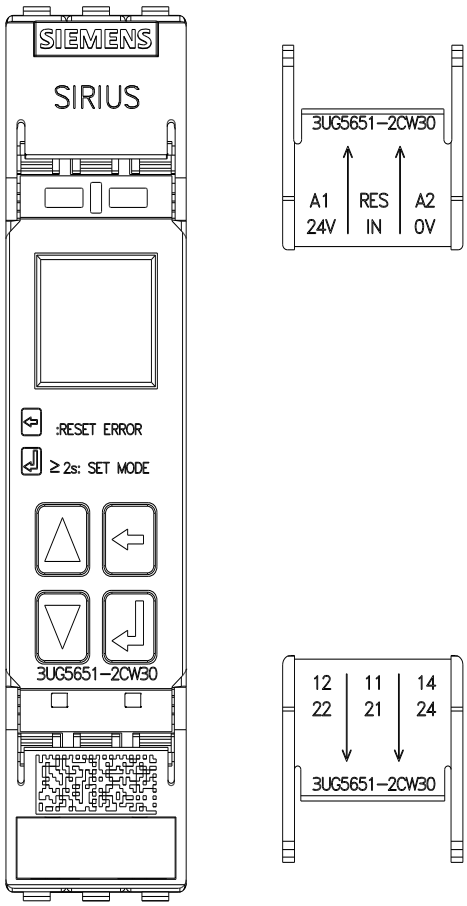

Subject to change without notice
© Copyright Siemens

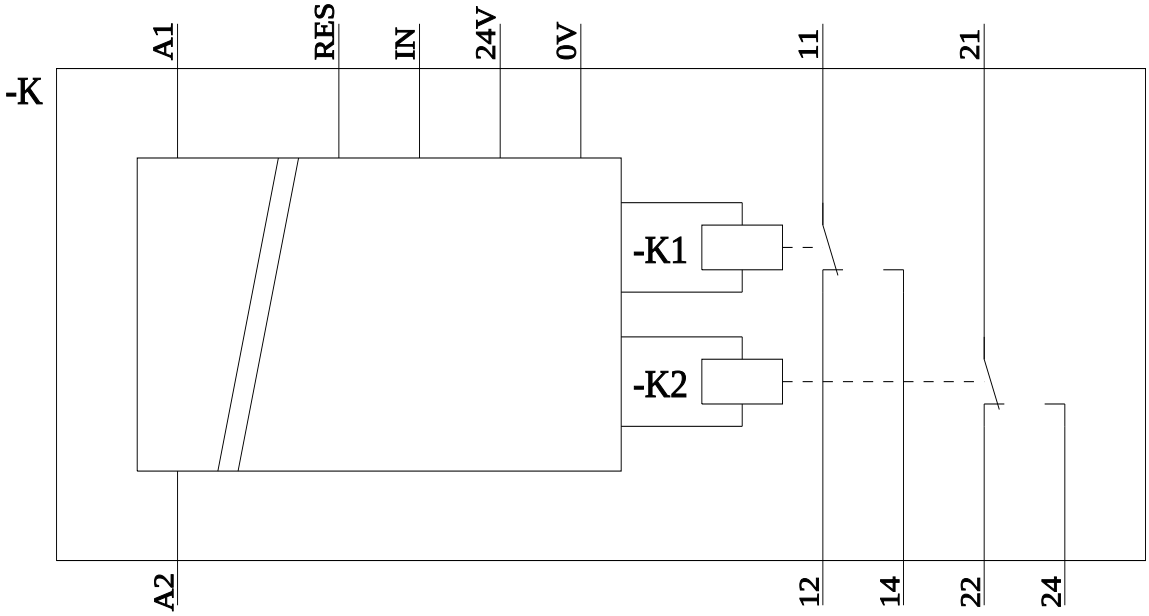

last modified: 10/27/2025

Subject to change without notice
© Copyright Siemens