SIEMENS

Data sheet 3VA1440-7MH32-0AA0

circuit breaker 3VA1 IEC Frame 630 breaking capacity class C Icu=110 kA @ 415 V 3-pole, starter protection TM120M, AM, In=400 A without overload protection short-circuit protection Ii=6...12 x In nut keeper kit

Model	
product brand name	SENTRON
product designation	Molded case circuit breaker
design of the product	Starter protection
design of the overcurrent release	TM120M
protection function of the overcurrent release	I
number of poles	3
General technical data	
insulation voltage / rated value	800 V
operating voltage / at AC / rated value	690 V
power loss [W] / maximum	76.8 W
power loss [W] / for rated value of the current / at AC / in hot operating state / per pole	25.6 W
mechanical service life (operating cycles) / typical	20 000
electrical endurance (operating cycles) / at AC-1 / at 380/415 V	4 000
electrical endurance (operating cycles) / at AC-1 / at 690 V	3 000
product feature / for neutral conductors / upgradable/retrofittable / short-circuit and overload proof	No
ground-fault monitoring version	Without
product function	
● communication function	No
● other measurement function	No
Net Weight	4.92 kg
Current	
operational current	
● at 40 °C	400 A
● at 45 °C	400 A
● at 50 °C	400 A
● at 55 °C	392 A
● at 60 °C	384 A
● at 65 °C	376 A
● at 70 °C	367 A
Switching capacity according to IEC 60947	
switching capacity class of the circuit breaker	C
maximum short-circuit current breaking capacity (Icu)	
● at 240 V	200 kA
● at 415 V	110 kA
● at 440 V	110 kA
● at 500 V	70 kA

Subject to change without notice
© Copyright Siemens

● at 690 V	10 kA
operating short-circuit current breaking capacity (Ics)	
● at 240 V	200 kA
● at 415 V	110 kA
● at 440 V	110 kA
● at 500 V	70 kA
● at 690 V	6 kA
short-circuit current making capacity (Icm)	
● at 240 V	440 kA
● at 415 V	242 kA
● at 440 V	242 kA
● at 500 V	154 kA
● at 690 V	17 kA
design of short-circuit protection	For switching power values in DC networks, see the 3VA molded case circuit breaker device manual; link to be found under Service & Support in the last chapter
Adjustable parameters	
adjustable response value setting current (Ii) / for I-tripping	
● minimum	2 400 A
● maximum	4 800 A
adjustable setting current (InN) / for N-tripping	
● minimum	400 A
● maximum	400 A
product function / grounding protection	No
Mechanical Design	
product component	
● undervoltage release	No
● voltage trigger	No
● trip indicator	No
height [in]	9.76 in
height	248 mm
width [in]	5.43 in
width	138 mm
depth [in]	4.33 in
depth	110 mm
Connections	
arrangement of electrical connectors / for main current circuit	Front terminal
type of electrical connection / for main current circuit	nut keeper kit on both ends
type of connectable conductor cross-sections / for flat-bar terminal connection / minimum	20 x 1 mm
type of connectable conductor cross-sections / for flat-bar terminal connection / maximum	35 x 10 mm
design of the surface / of the connections / on the top of the switch (N, 1, 3, 5)	Silver
design of the surface / of the connections / on the bottom of the switch (N, 2, 4, 6)	Silver
Auxiliary circuit	
number of CO contacts / for auxiliary contacts	0
Accessories	
product extension / optional / motor drive	Yes
Environmental conditions	
protection class IP / on the front	IP40
ambient temperature	
● during operation / minimum	-25 °C
● during operation / maximum	70 °C
● during storage / minimum	-40 °C
● during storage / maximum	80 °C
Environmental footprint	
global warming potential [CO2 eq] / total	473 kg
global warming potential [CO2 eq] / during manufacturing	23.9 kg

Subject to change without notice
© Copyright Siemens

global warming potential [CO2 eq] / during operation	450 kg
global warming potential [CO2 eq] / after end of life	-2.9 kg
reference code / according to IEC 81346-2	Q

Approvals / Certificates

General Product Approval

CCC VDE Miscellaneous EAC Confirmation

General Product Approval	EMV	Test Certificates		
UKCA CE EG-Konf.	RCM	Special Test Certificate	Miscellaneous	Type Test Certificates/Test Report

Maritime application					other
ABS	BUREAU VERITAS	DNV	LRS	CCS (China Classification Society)	Miscellaneous

other		Environment		
Confirmation	产品合格 QC PASS	Environmental Confirmations	Environmental Confirmations	EPD

Further information

Information on the packaging
https://support.industry.siemens.com/cs/ww/en/view/109813875
Information for data generation and storage
https://support.industry.siemens.com/cs/ww/en/view/109995012
Information- and Downloadcenter (Catalogs, Brochures,…)
https://www.siemens.com/lowvoltage/catalogs
Industry Mall (Online ordering system)
https://mall.industry.siemens.com/mall/en/en/Catalog/product?mlfb=3VA1440-7MH32-0AA0
Service&Support (Manuals, Certificates, Characteristics, FAQs,...)
https://support.industry.siemens.com/cs/ww/en/ps/3VA1440-7MH32-0AA0
Image database (product images, 2D dimension drawings, 3D models, device circuit diagrams, ...)
https://www.automation.siemens.com/bilddb/cax_en.aspx?mlfb=3VA1440-7MH32-0AA0
CAx-Online-Generator
https://www.siemens.com/cax
Tender specifications
https://www.siemens.com/specifications
Characteristic curves
https://curves.simaris.siemens.com/curves/<mmp_prod_noCOMP="HAUPT"></mmp_prod__no>

Subject to change without notice
© Copyright Siemens

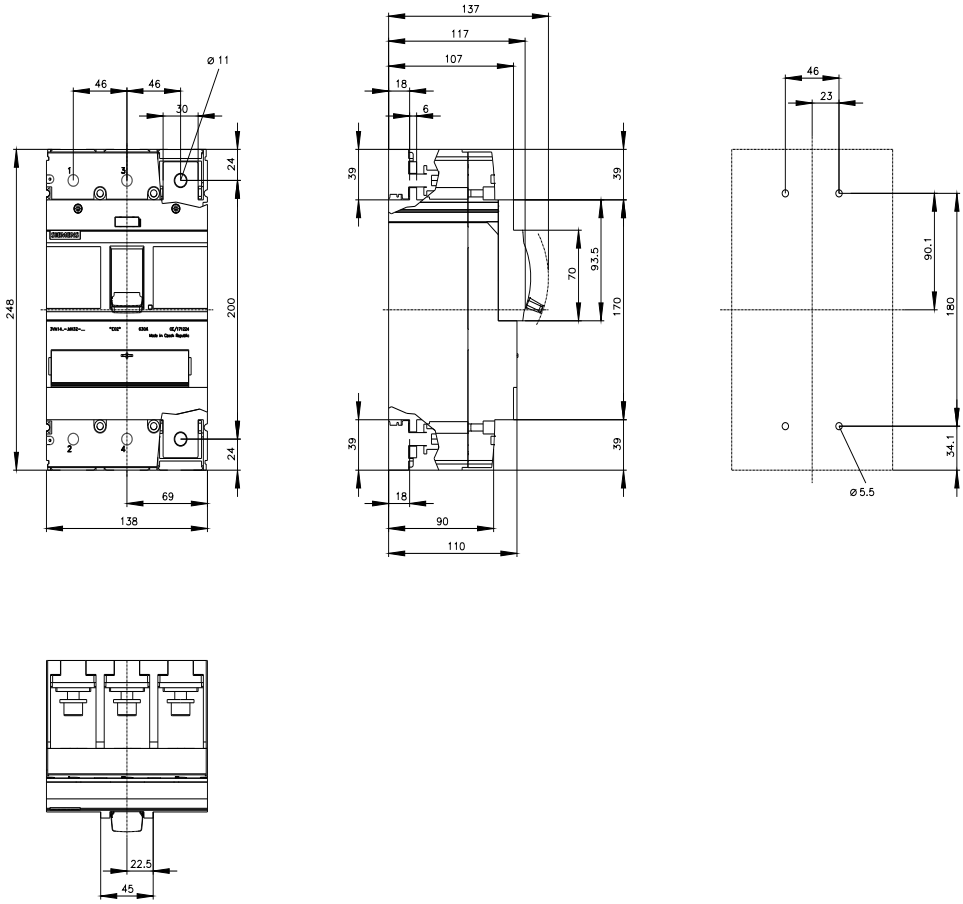

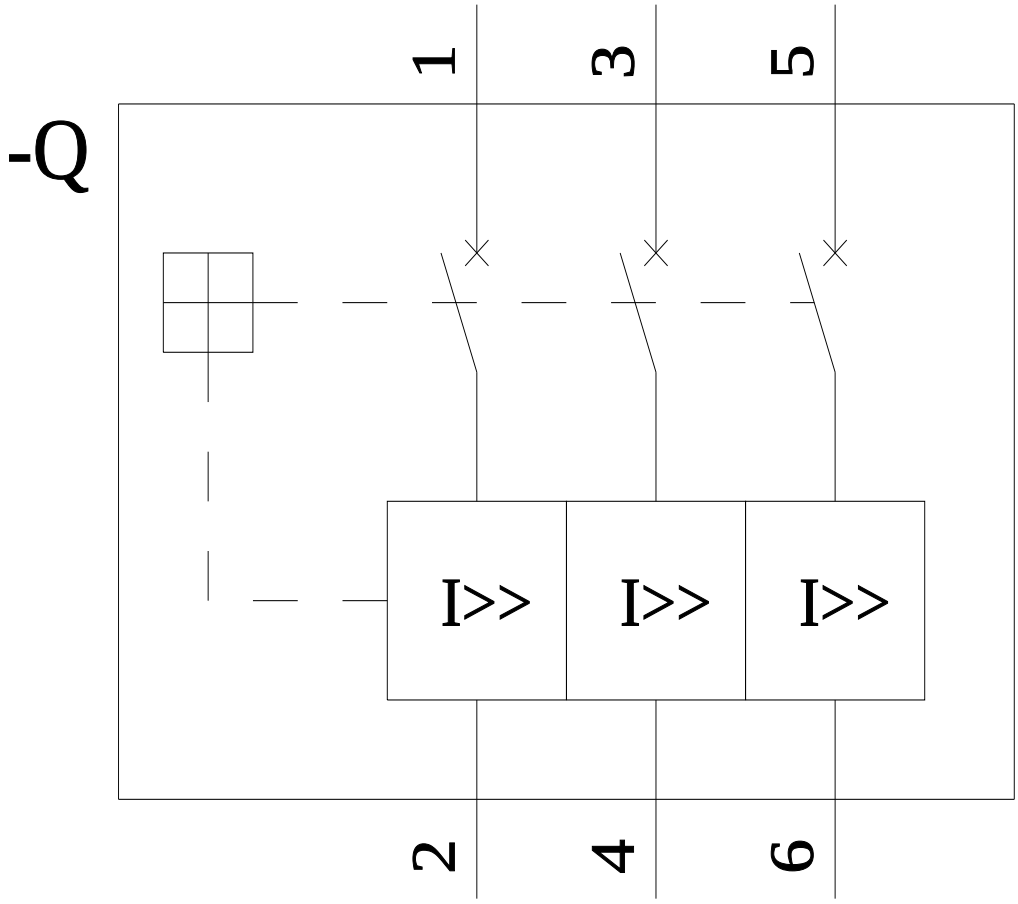

last modified: 8/11/2025

Subject to change without notice
© Copyright Siemens

Subject to change without notice
© Copyright Siemens

Subject to change without notice
© Copyright Siemens