Product datasheet

Specifications

servo motor BSH, Lexium 32, 32.1N.m, 3000rpm, 140mm, keyed shaft, Sincos multi turn, without brake, IP50, straight

BSH1404P12A1P

Discontinued

Discontinued on: 30 Jun 2023

Main

Device short name	BSH
Product or component type	Servo motor
Maximum mechanical speed	4000 rpm
Continuous stall torque	33.4 N.m for LXM32.D72N4 at 24 A, 400 V, three phase 33.4 N.m for LXM32.D72N4 at 24 A, 480 V, three phase 32.1 N.m for LXM05AD57N4, 380...480 V, three phase 32.1 N.m for LXM05BD57N4, 380...480 V, three phase 32.1 N.m for LXM05CD57N4, 380...480 V, three phase
Peak stall torque	103.6 N.m for LXM32.D72N4 at 24 A, 400 V, three phase 103.6 N.m for LXM32.D72N4 at 24 A, 480 V, three phase 63.09 N.m for LXM05AD57N4, 380...480 V, three phase 63.09 N.m for LXM05BD57N4, 380...480 V, three phase 63.09 N.m for LXM05CD57N4, 380...480 V, three phase
Nominal output power	5000 W for LXM32.D72N4 at 24 A, 400 V, three phase 5000 W for LXM32.D72N4 at 24 A, 480 V, three phase 3400 W for LXM05AD57N4, 380...480 V, three phase 3400 W for LXM05BD57N4, 380...480 V, three phase 3400 W for LXM05CD57N4, 380...480 V, three phase
Nominal torque	19 N.m for LXM32.D72N4 at 24 A, 400 V, three phase 19 N.m for LXM32.D72N4 at 24 A, 480 V, three phase 10.8 N.m for LXM05AD57N4, 380...480 V, three phase 10.8 N.m for LXM05BD57N4, 380...480 V, three phase 10.8 N.m for LXM05CD57N4, 380...480 V, three phase
Nominal speed	2500 rpm for LXM32.D72N4 at 24 A, 400 V, three phase 2500 rpm for LXM32.D72N4 at 24 A, 480 V, three phase 3000 rpm for LXM05AD57N4, 380...480 V, three phase 3000 rpm for LXM05BD57N4, 380...480 V, three phase 3000 rpm for LXM05CD57N4, 380...480 V, three phase
Product compatibility	LXM05AD57N4 at 380...480 V three phase LXM05BD57N4 at 380...480 V three phase LXM05CD57N4 at 380...480 V three phase LXM32.D72N4 at 400 V three phase LXM32.D72N4 at 480 V three phase
Shaft end	Keyed
IP degree of protection	IP50 standard
Speed feedback resolution	131072 points/turn x 4096 turns
Holding brake	Without
Mounting support	International standard flange
Electrical connection	Straight connectors

Complementary

Disclaimer: This documentation is not intended as a substitute for and is not to be used for determining suitability or reliability of these products for specific user applications

Range compatibility	Lexium 32 Lexium 05
supply voltage max	480 V
Network number of phases	Three phase
Continuous stall current	21.3 A
maximum continuous power	4.33 W
Maximum current Irms	72 A for LXM32.D72N4 95.6 A for LXM05AD57N4 95.6 A for LXM05BD57N4 95.6 A for LXM05CD57N4
Maximum permanent current	95.6 A
Switching frequency	8 kHz
Second shaft	Without second shaft end
Shaft diameter	24 mm
Shaft length	50 mm
Key width	40 mm
Feedback type	Multiturn SinCos Hiperface
Motor flange size	140 mm
Number of motor stacks	4
Torque constant	1.57 N.m/A at 120 °C
Back emf constant	104 V/krpm at 120 °C
Rotor inertia	23.7 kg.cm²
Stator resistance	0.28 Ohm at 20 °C
Stator inductance	3.9 mH at 20 °C
Stator electrical time constant	13.93 ms at 20 °C
Maximum radial force Fr	1840 N at 3000 rpm 2110 N at 2000 rpm 2660 N at 1000 rpm
Maximum axial force Fa	0.2 x Fr
Type of cooling	Natural convection
Length	382.5 mm
Centring collar diameter	130 mm
Centring collar depth	3.5 mm
Number of mounting holes	4
Mounting holes diameter	11 mm
Circle diameter of the mounting holes	165 mm
Product weight	26 kg
Sizing reference	BSH1404P
Network number of phases	3
Accuracy error [angular]	1.4 °
Temperature copper hot	120 °C
Temperature magnet hot	100 °C
Temperature magnet rt	20 °C

Packing Units

Unit Type of Package 1	PCE
Number of Units in Package 1	1
Package 1 Height	27.0 cm
Package 1 Width	27.0 cm
Package 1 Length	60.6 cm
Package 1 Weight	18.5 kg

Contractual warranty

Warranty (in months)	18

Environmental Data

Schneider Electric aims to achieve Net Zero status by 2050 through supply chain partnerships, lower impact materials, and circularity via our ongoing “Use Better, Use Longer, Use Again” campaign to extend product lifetimes and recyclability.

Environmental Data explained

How we assess product sustainability

Use Better

Materials and Substances

EU RoHS Directive	Compliant By Exemption

Use Longer

Lifetime extension

Repair	No

Use Again

Repack and remanufacture

End of life manual availability	No need of specific recycling operations

Dimensions Drawings

Servo Motors Dimensions

Example with Straight Connectors

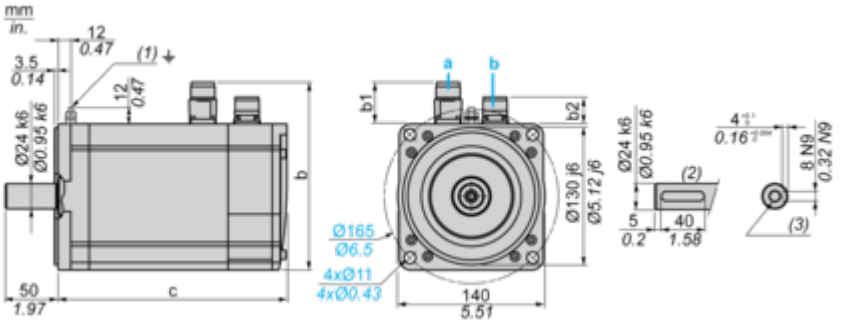

a: Power supply for servo motor brake
b: Power supply for servo motor encoder
(1) M4 screw
(2) Shaft end, keyed slot (optional)
(3) For screws M8 x 19 mm/M8 x 0.75 in.

Dimensions in mm

Straight connectors			Rotatable angled connectors			c (without brake)	c (with brake)
b	b1	b2	b	b1	b2		
192.5	54	25.5	198.5	60	39.5	383	421

Dimensions in in.

Straight connectors			Rotatable angled connectors			c (without brake)	c (with brake)
b	b1	b2	b	b1	b2		
7.57	2.12	1.00	7.81	2.36	1.55	15.07	16.57

Performance Curves

400 V 3-Phase Supply Voltage

Torque/Speed Curves

Servo motor with LXM32•D72N4 servo drive

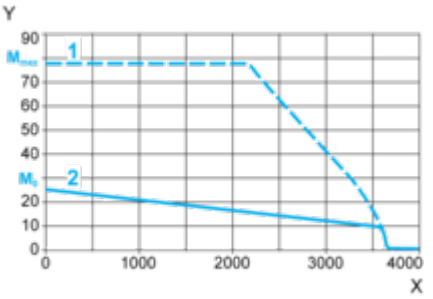

X Speed in rpm
Y Torque in Nm
1 Peak torque
2 Continuous torque

480 V 3-Phase Supply Voltage

Torque/Speed Curves

Servo motor with LXM32•D72N4 servo drive

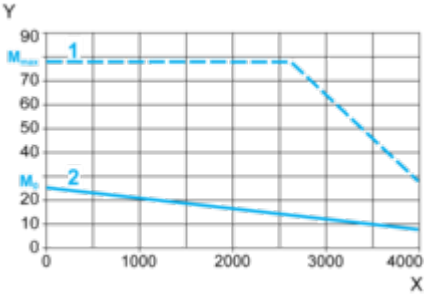

X Speed in rpm
Y Torque in Nm
1 Peak torque
2 Continuous torque